210178
SH-G-CS
Mounting plate for CS 50

- Highly flexible versatile mounting system
- Universal mounting
- Stepless adjustment
- Robust design

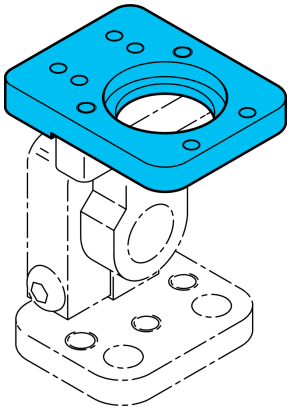

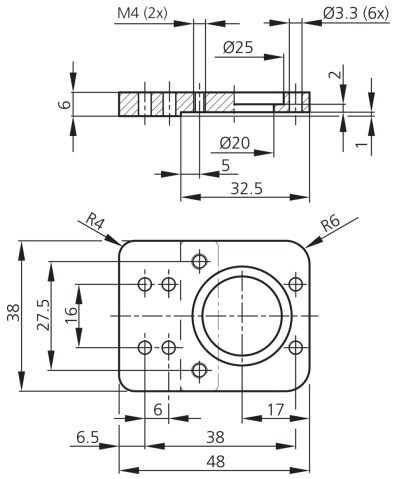

Technical data (typ.)	+20°C
Housing material	Aluminum (Black, Anodized)
Component	Basic holder
Operation with	Clamping cylinder HS-KL-12-20-V
To be used for	CS 50 Vision Sensors
Product series	Z-UBT-KL-PH Product bracket

More information / accessories	https://www.di-soric.com/210178

© di-soric . Right to change reserved . 16.07.2024 . Page 1 (1)